ABUTMENTS
PLATE GIRDER
HIGHWAY BRIDGE
OVER
WARM CREEK
SOUTH E. STREET
SAN BERNARDINO COUNTY
CALIFORNIA
SCALE 1/4"=1'
1922

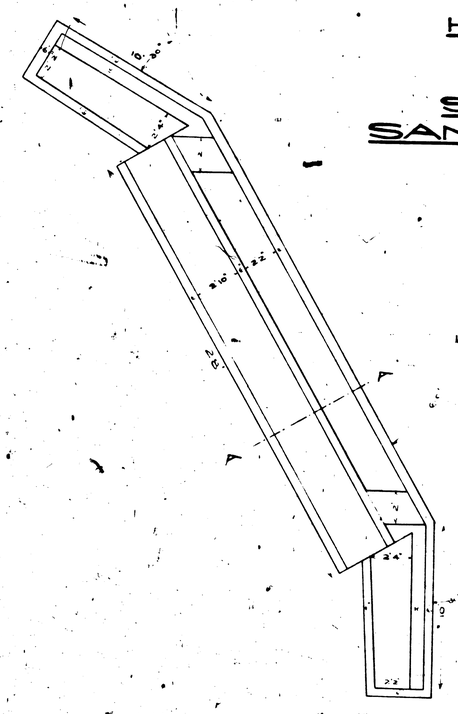

PLAN

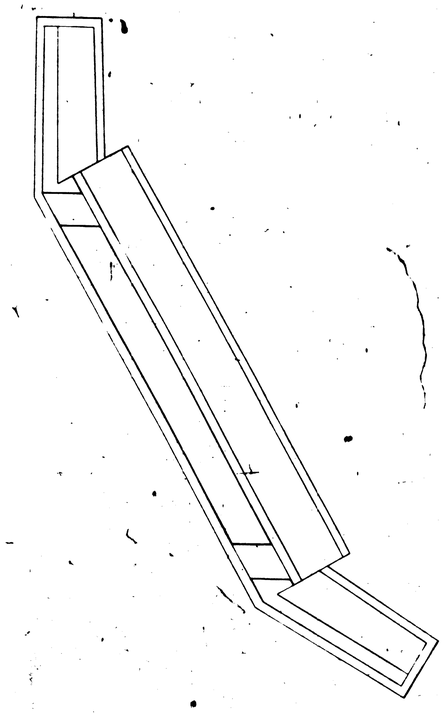

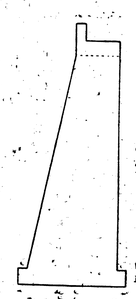

CROSS SECTION
A-A

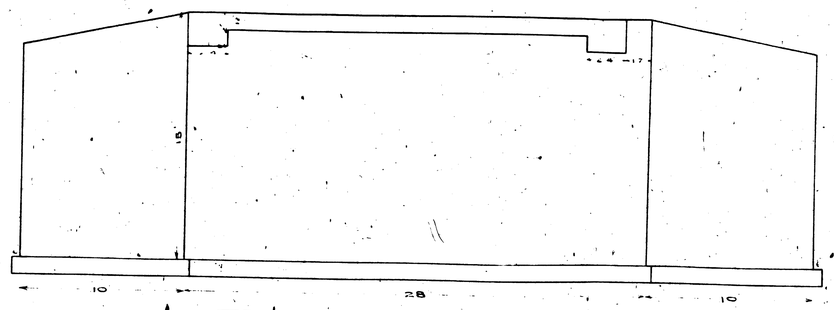

FRONT ELEVATION
WINGS SHOWN SAME PLANE AS ABUTMENT.

END ELEVATION WING WALL

CROSS SECTION WING WALL

ABUTMENTS
PLATE GIRDER
HIGHWAY BRIDGE
OVER
WARM CREEK
SOUTH E. STREET
SAN BERNARDINO COUNTY
CALIFORNIA
SCALE 1/4"=1'
1922

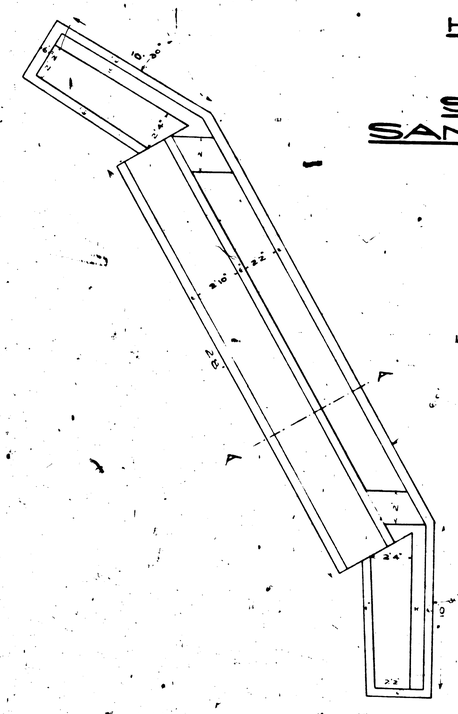

PLAN

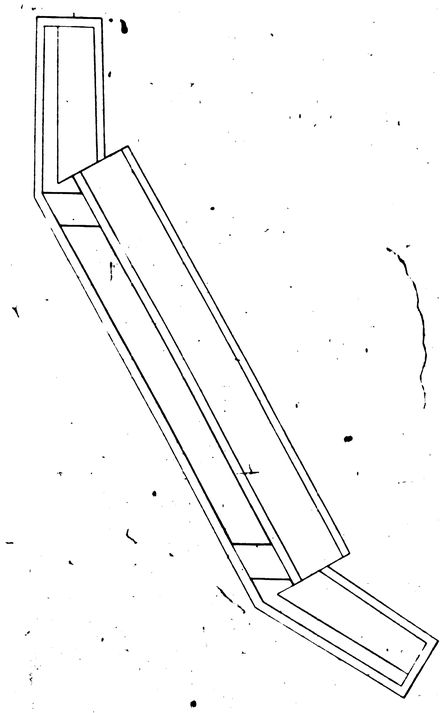

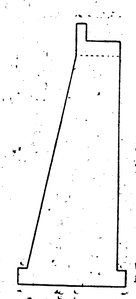

CROSS SECTION
A-A

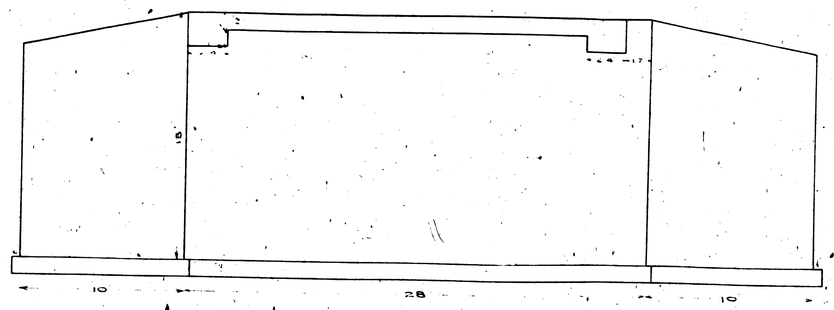

FRONT ELEVATION
WINGS SHOWN SAME PLANE AS ABUTMENT.

END ELEVATION WING WALL

CROSS SECTION WING WALL